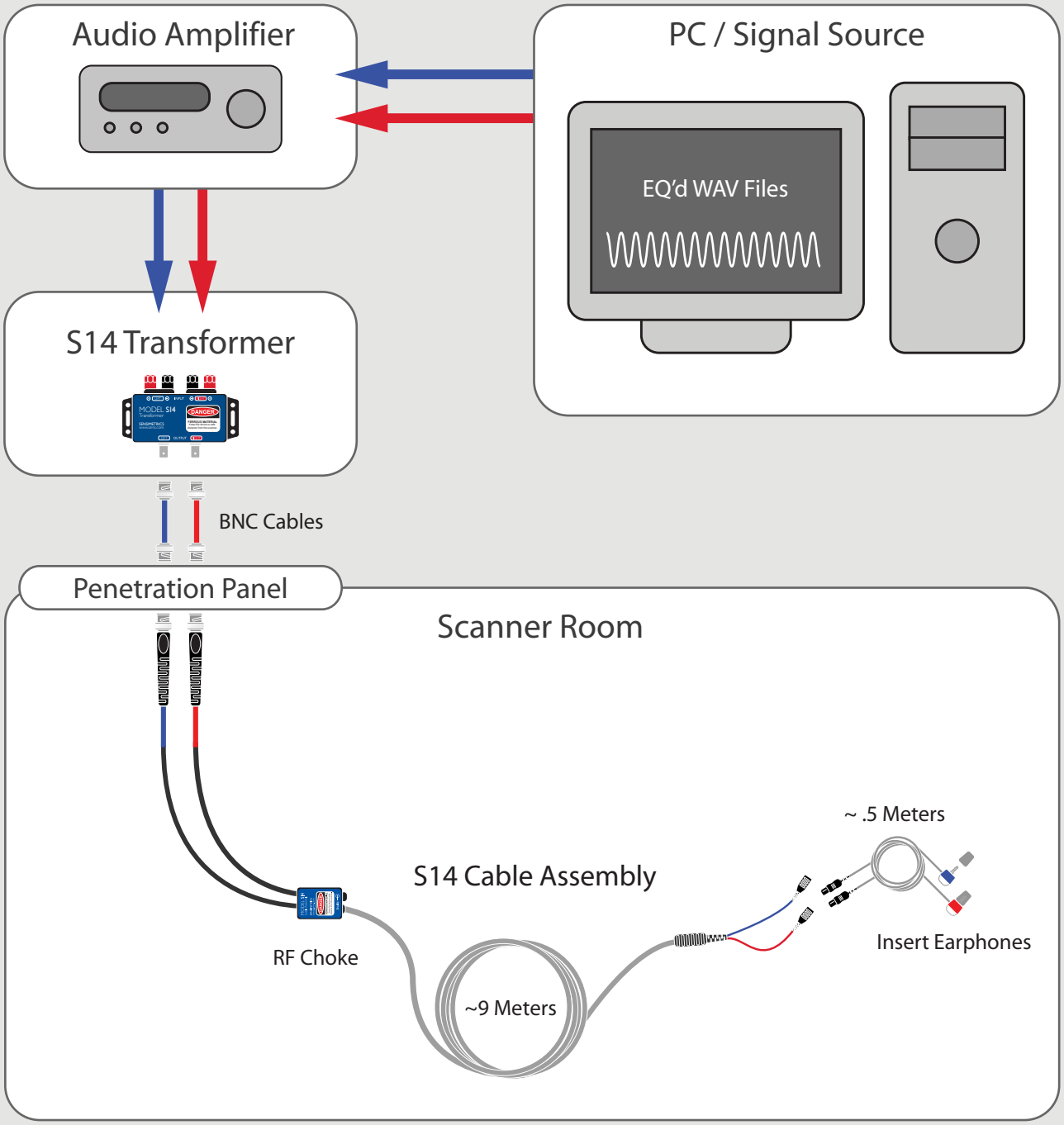
Audio Amplifier
PC / Signal Source
EQ'd WAV Files
S14 Transformer
BNC Cables
Penetration Panel
Scanner Room
~ .5 Meters
S14 Cable Assembly
Insert Earphones
RF Choke
~9 Meters